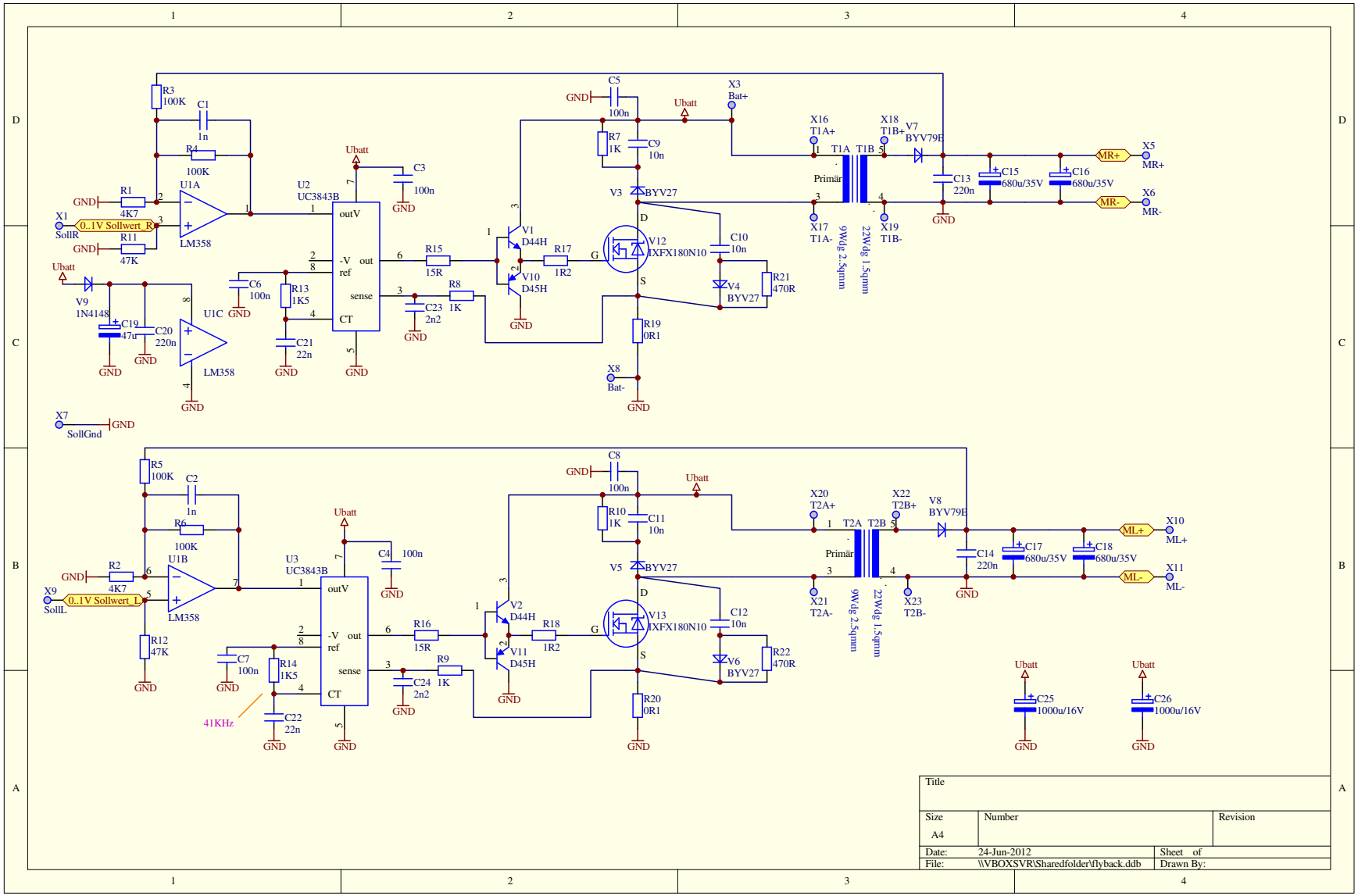
R3 100K
C1 1n
R4 100K
R1 4K7
R11 47K
X1 SollR
0..1V Sollwert_R
U1A LM358
U1C LM358
V9 1N4148
C19 47u
C20 220n
X7 SollGnd
U2 UC3843B
outV
-V ref
out
sense
CT
C3 100n
C6 100n
R13 1K5
C21 22n
R15 15R
R8 1K
C23 2n2
V1 D44H
V10 D45H
R17 1R2
C5 100n
R7 1K
C9 10n
V3 BYV27
V12 IXFX180N10
C10 10n
V4 BYV27
R21 470R
R19 0R1
X8 Bat-
X3 Bat+
Ubatt
GND
X16 T1A+
X17 T1A-
X18 T1B+
X19 T1B-
T1A T1B
Primär
9Wdg 2.5qmm
22Wdg 1.5qmm
V7 BYV79E
C13 220n
C15 680u/35V
C16 680u/35V
MR+
MR-
X5 MR+
X6 MR-
R5 100K
C2 1n
R6 100K
R2 4K7
R12 47K
X9 SollL
0..1V Sollwert_L
U1B LM358
U3 UC3843B
C4 100n
C7 100n
R14 1K5
C22 22n
41KHz
R16 15R
R9 1K
C24 2n2
V2 D44H
V11 D45H
R18 1R2
C8 100n
R10 1K
C11 10n
V5 BYV27
V13 IXFX180N10
C12 10n
V6 BYV27
R22 470R
R20 0R1
X20 T2A+
X21 T2A-
X22 T2B+
X23 T2B-
T2A T2B
V8 BYV79E
C14 220n
C17 680u/35V
C18 680u/35V
ML+
ML-
X10 ML+
X11 ML-
C25 1000u/16V
C26 1000u/16V
Title
Size A4
Number
Revision
Date: 24-Jun-2012
Sheet of
File: \\VBOXSVR\Sharedfolder\flyback.ddb
Drawn By: