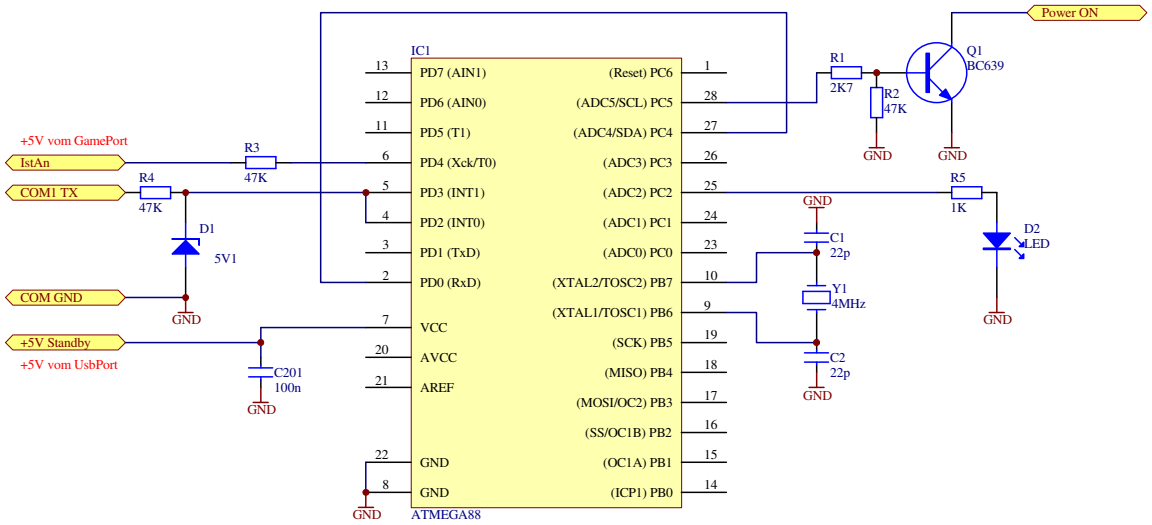

Title			
Size A4	Number		Revision
Date: 20-Mar-2012		Sheet of	
File: \\VBOXSVR\Sharedfolder\cmosUhrErsatz.sch		Drawn By:	